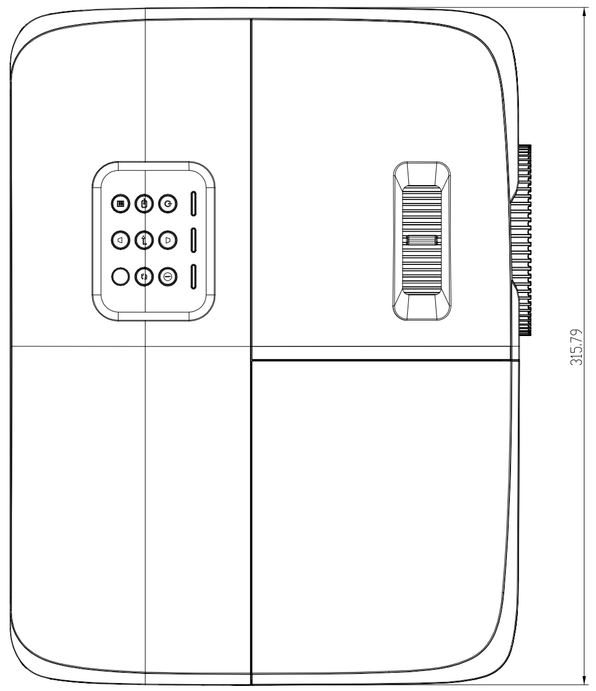


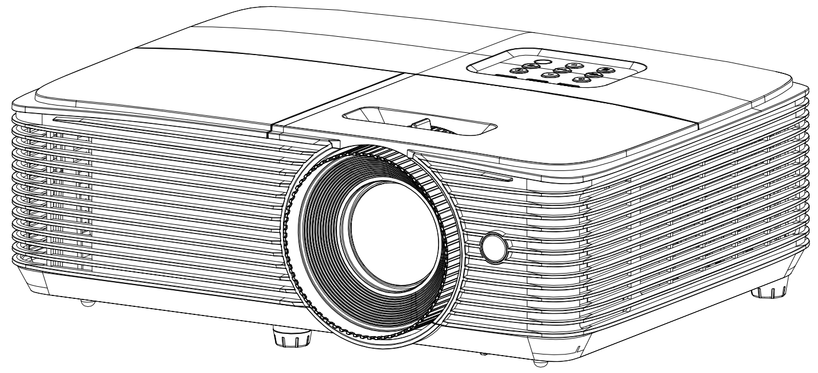

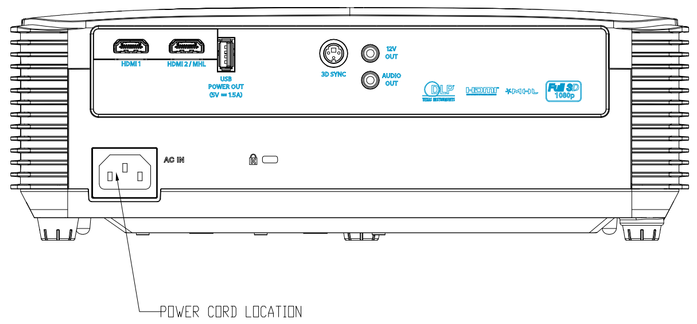


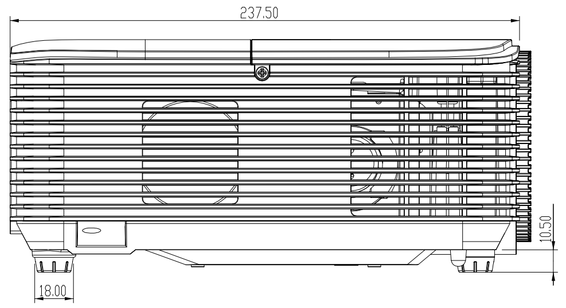


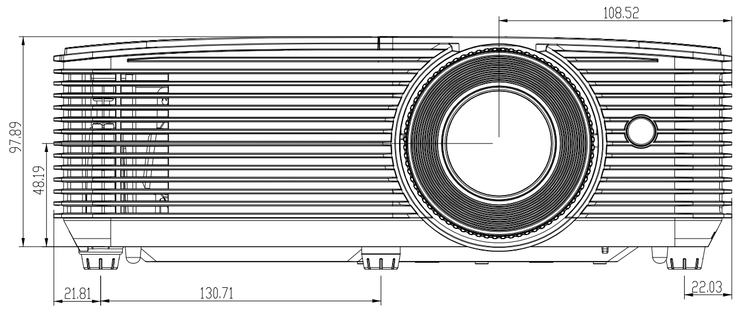


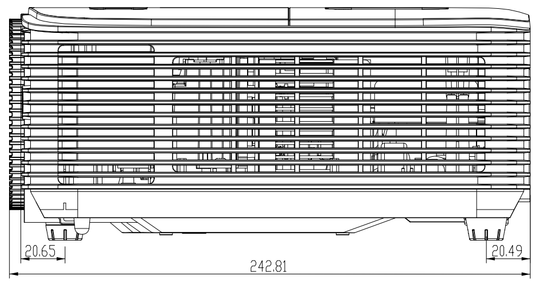


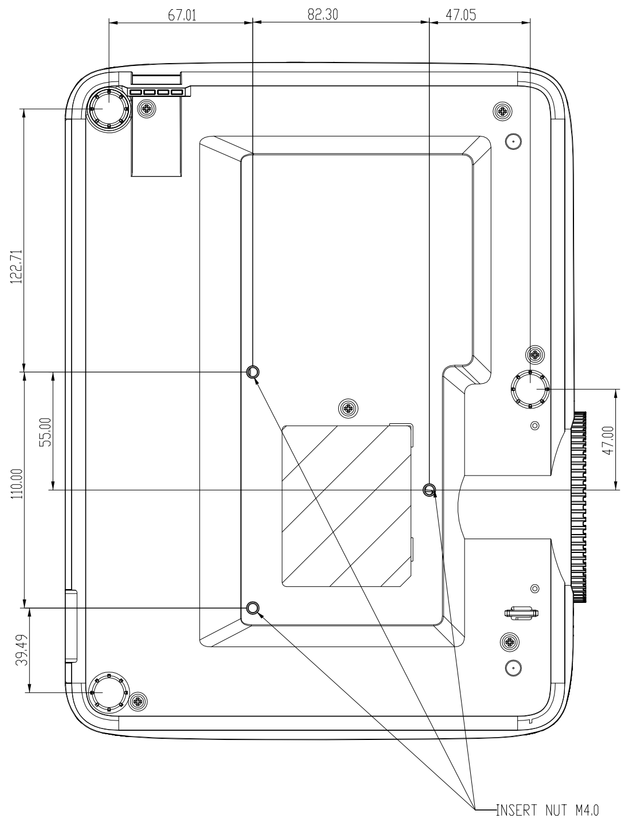


| Rev. | Initiator | Date | Description | ECR NO. |
|---|---|---|---|---|
| | | | FORMAL RELEASE | X |

| LIMITS UNLESS OTHERWISE NOTED | | | |
|---|---|---|---|
| 1-6 | ±0.1 | 300-1000 | ±0.8 |
| 6-30 | ±0.2 | 1000-2000 | ±1.2 |
| 30-100 | ±0.3 | 2000- | ±2.0 |
| 100-300 | ±0.5 | ANGLE | ±0.5° |

| | | |
|---|---|---|
| DRAWN | | Optoma Corporation |
| ENG. | | |
| CHK. | | NAME : HD27e OUTLINE INFORMATION |
| APPD. | | |
| TITLE | HD27e | PART NO. / Rev. |
| SCALE 1:1 | UNIT mm / MATERIAL | FINISH / A1 / SHEET 1 OF 1 |

Part Name: 0-U2-SYSTEM-LAYOUT.PRT Ver: D1.15 / ?? Drawing Name: SIX_VIEW_FOR_HD27e.DRW

L04-3016F1 Rev.C