Panasonic Projector

PT-DZ16K

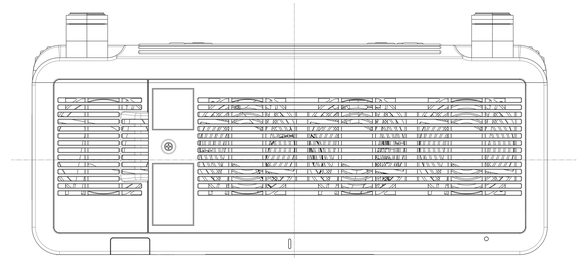

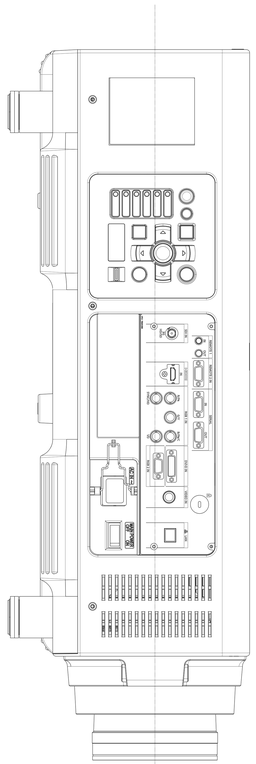

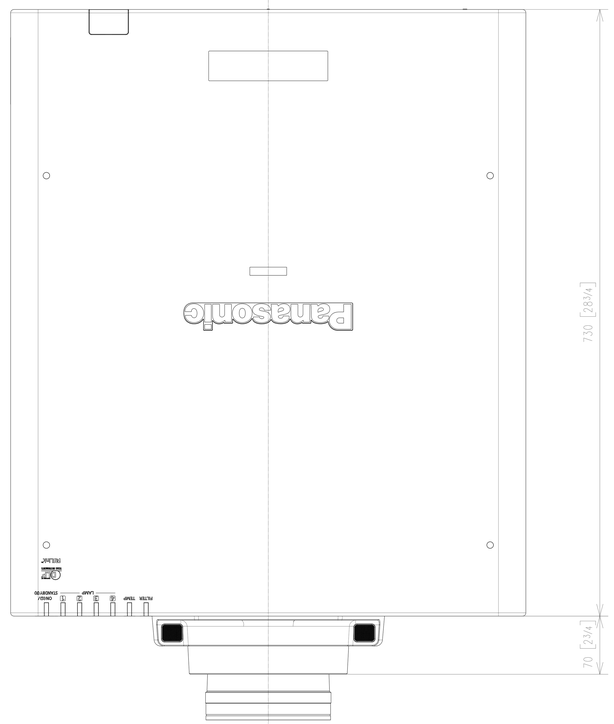

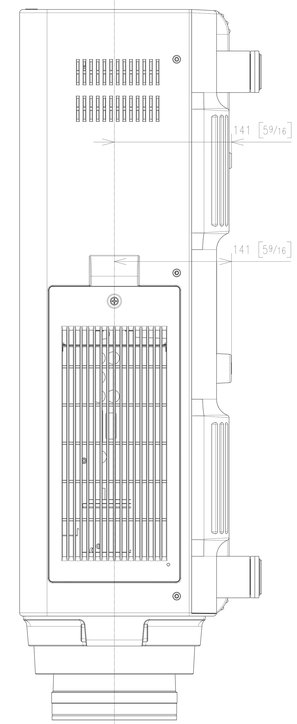

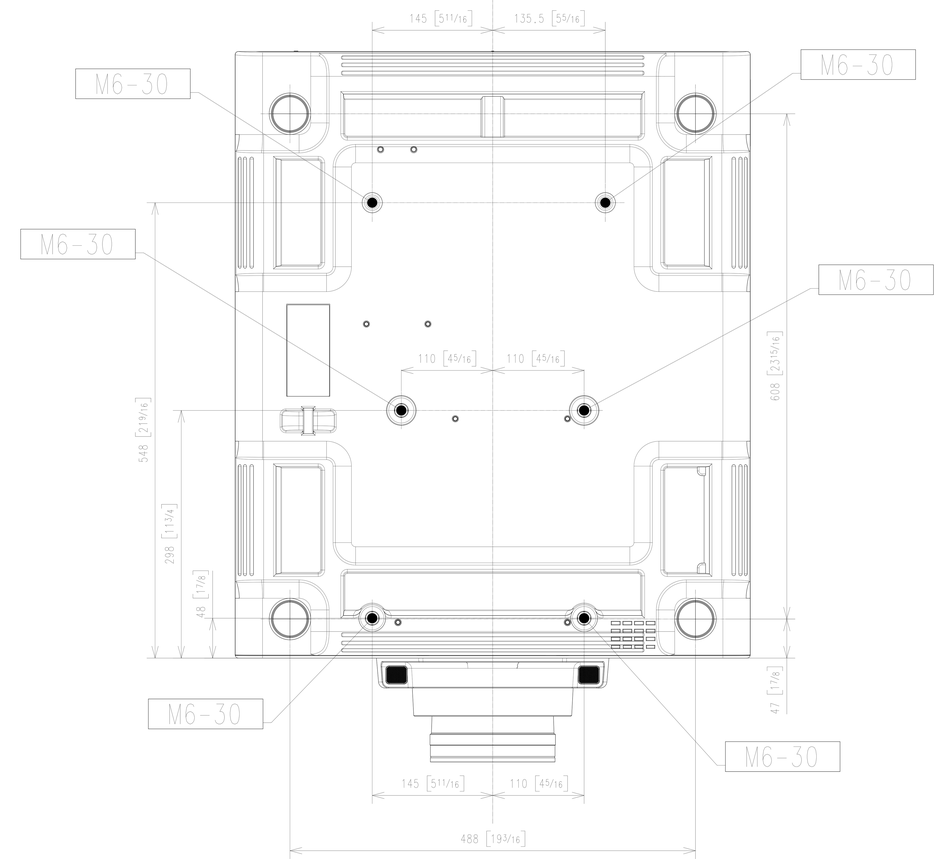

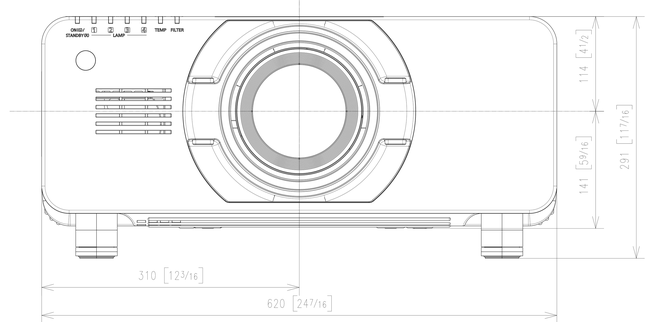

mm [inches]