Special Edition DarkStar® Series

Model Number	Nominal Diagonal	Aspect Ratio	Overall Width (A)	View Width (A1)	Overall Height (B)	View Height (B1)	Frame Width (C)	Frame Depth (D)
Unit: mm								
SE106H-DS	106"	16:9	2464.8	2346	1438.8	1320	59.4	41.6
SE122H-DS	122"	16:9	2820.8	2702	1638.8	1520	59.4	41.6
SE156C-DS	156"	2.40:1	3766.8	3648	1638.8	1520	59.4	41.6
Unit: inch								
SE106H-DS	106"	16:9	97.0	92.4	56.6	52.0	2.3	1.6
SE122H-DS	122"	16:9	111.1	106.4	64.5	59.8	2.3	1.6
SE156C-DS	156"	2.40:1	148.3	143.6	64.5	59.8	2.3	1.6

The listed measurements are for general reference only. Please contact EPV Screens® to verify product design and dimensions before attempting to integrate its products with any structural or furniture modification. Although a manufacturer may offer product advice, it may be taken or disregarded at the integrator's discretion. Elite Screens will not be held responsible or be otherwise liable for faulty installations.
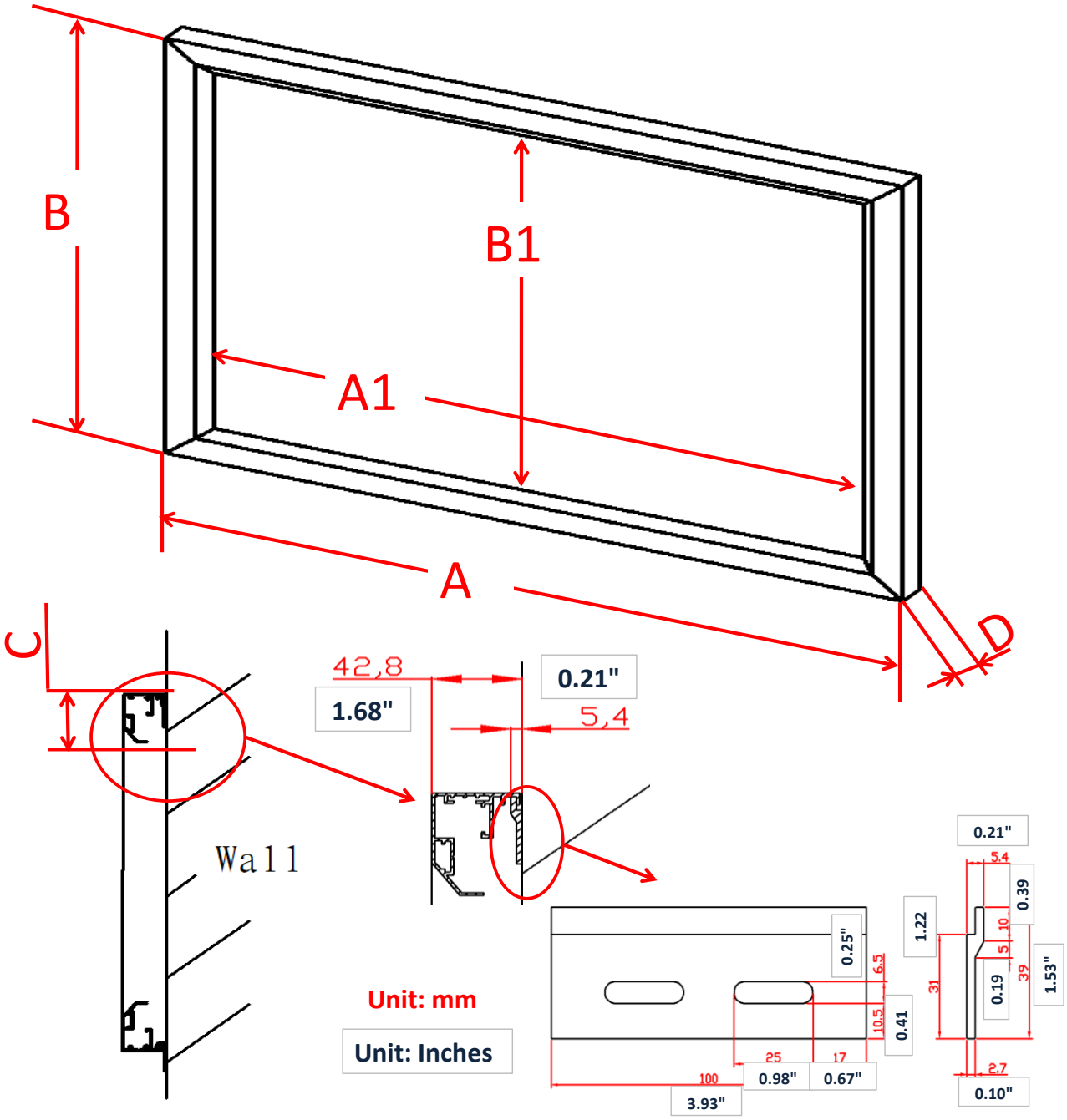
Note: Data Error may be ±1"