USB3.0
HD Color Video Camera
User Manual

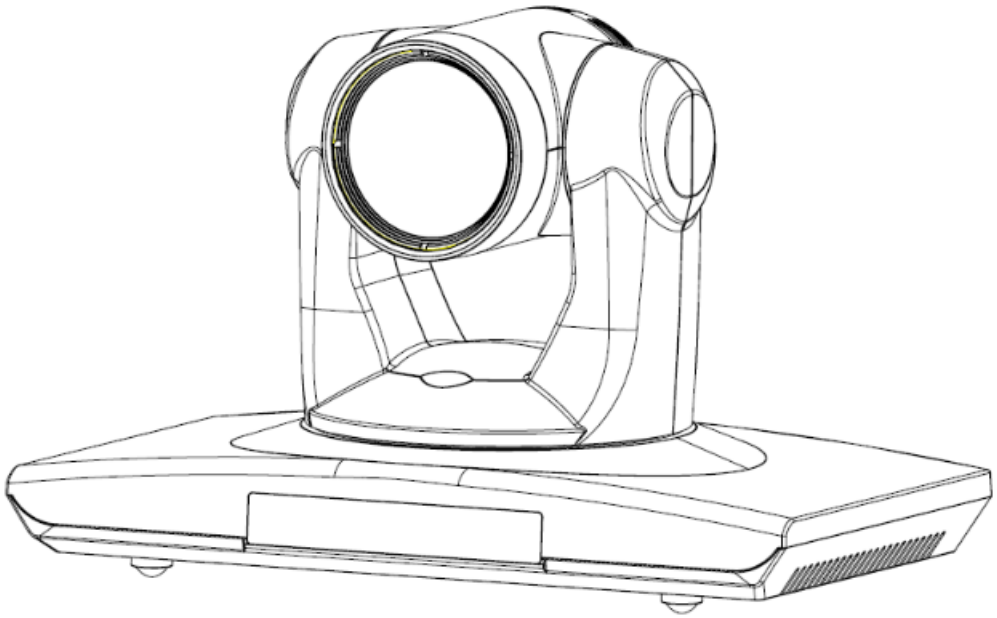

（English）

Preface:

Thanks for using our HD color video conference camera.

This manual introduces the function installation and operation of the HD camera. Prior to installation and usage, please read the manual thoroughly.

Warning

This product can be only used in specified range in order to avoid any damage or danger;

●Don’t expose the camera to rain or moisture place

●Don’t remove the cover to reduce the risk of electric shock. Refer servicing to qualified personnel.

●Never operate the camera under unqualified temperature , humidity and power supply;

●Please use the soft cloth to clean the camera. Use neuter cleanser if bad smeared .Don’t use the strong or cleanser avoiding scuffing.

Notes

Electromagnetic fields at the specific frequency may affect the image quality.

【Contents】

Notes

Electric Safety
Installation and operation must accord with electric safety standards.
Caution to transport
Avoid stress, vibration and soakage in transport, storage and installation.
Polarity of power supply
The power supply of the product is ±12V; the max electrical current is 2A.
Polarity of the power supply as the following drawing

Install Carefully
Never move the camera by seizing the camera head. Don't rotate camera head by hand; otherwise, mechanical trouble will occur.
This series item must put on the smooth desk or platform, and it can not be installed slantways;
If the camera is installed on TV or computer, the base can be fixed by three double-sided adhesive trays.
Don't apply in corrosive liquid, gas or solid environment to avoid the cover which is made up of organic material. To make sure no obstacle in rotation range
Never power on before installation is not completed

Don't dispatch discretionarily
We are not responsible for any unauthorized modification or dismantling.

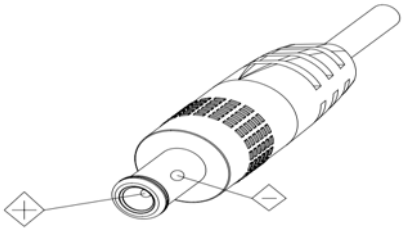

Accessories

When you open the box, check that all the supplied accessories are included:
Camera.....1
Power adapter 1
Power cable……1
USB 3.0 data cable……1
RS232 cable……1
Remote controller……1
User manual ……1
Double-side glue shim 4

Fast Installation

1、The system platform is Win7 or Win8;
2 Interface of computer main board is equipped with a USB3.0
Recommended configuration cpu : core i3 3.4GHz; Display card：Nvidia GT630;
Internal storage：6GB，better to use desktop；
3、Computer hardware device manager of universal serial bus (usb) controller are "USB3.0 Root Hub" and "USB3.0Extensible host controller"

1. Please check the connection before turning on the power.

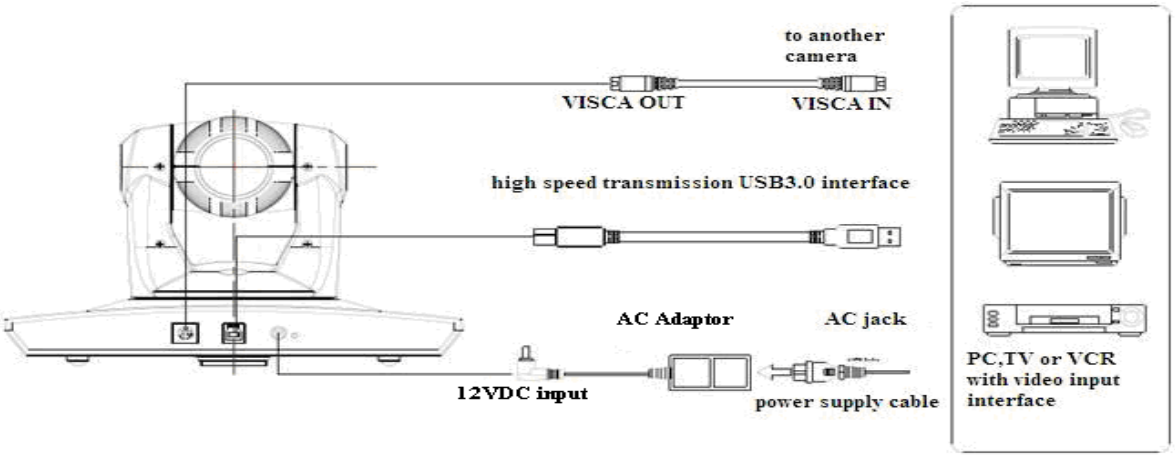

2. Dial switch setting at the bottom

Two DIP switch is set to ON; Namely select normal work mode.

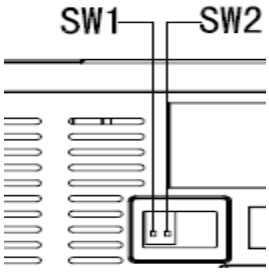

	SW2-2	SW2 -1	instruction
1	ON	OFF	Undefined
2	OFF	OFF	Updating mode
3	OFF	ON	Debugging mode
4	ON	ON	Working mode

3.rotary switch setting

The choice of 16 rotary switch video formats

Dial-up			
0	1080P60		
1	1080P50		
2	1080P30		
3	1080P25		
4	720P60		
5	720P50		
6	720P30		
7	720P25		
8	--------		
9	--------		
A	--------		
B	--------		
C	--------		
D	--------		
E	--------		
F	Display the video format set via OSD menu		

Note: need to restart the camera after switching video format.

4.When the power supply switch is “on”, the indicator light is open (red color)

5. Confirm the computer device manager has the image device "Cyt-FX3" device, and then you can find the "Cyt-FX3" device in the video client-side.

6. Confirm the computer installed USB3.0 driving. Computer hardware device manager of universal serial bus (usb) controller are “USB3.0 Root Hub”and“USB3.0Extensible host controller” If not, please install“Intel(R)_USB_3.0_extensible_Host_Controller_Driver

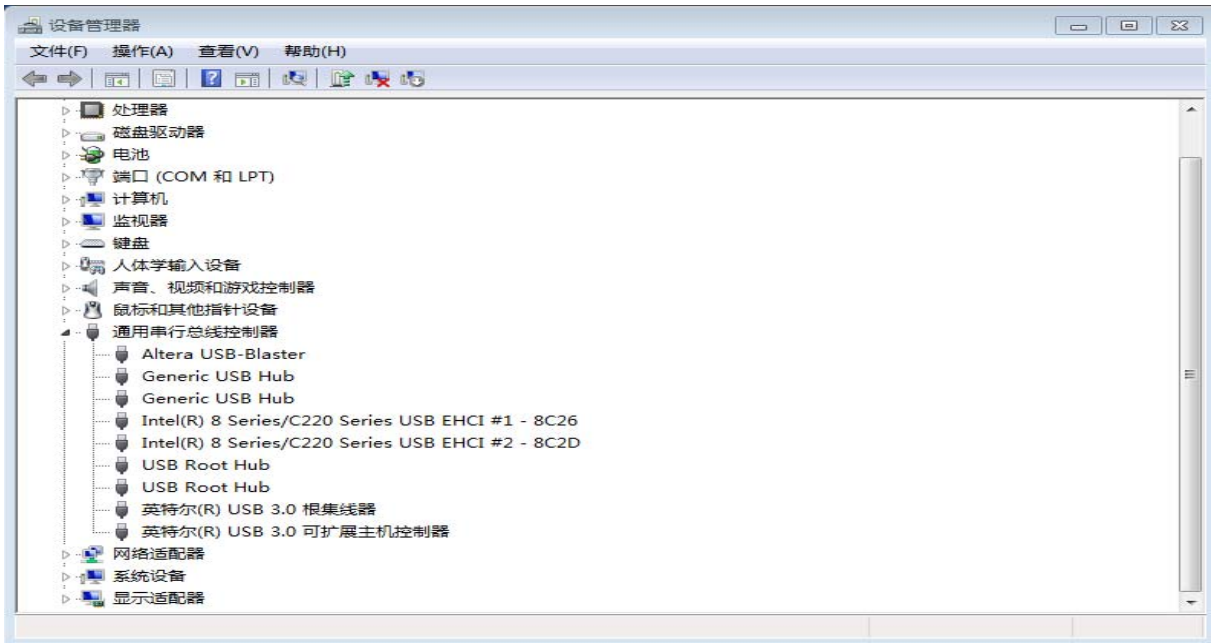

7.When testing the local video, software "e - CAMView" is available.
8.Test PC PTZ control with "AMCAP_PTZ" software to realize the dual function of video and control.Select "Preview" in the menu "Options" and click "PTZ Control" window through menu "PTZ". Source code control protocol will be provided in the attachment.

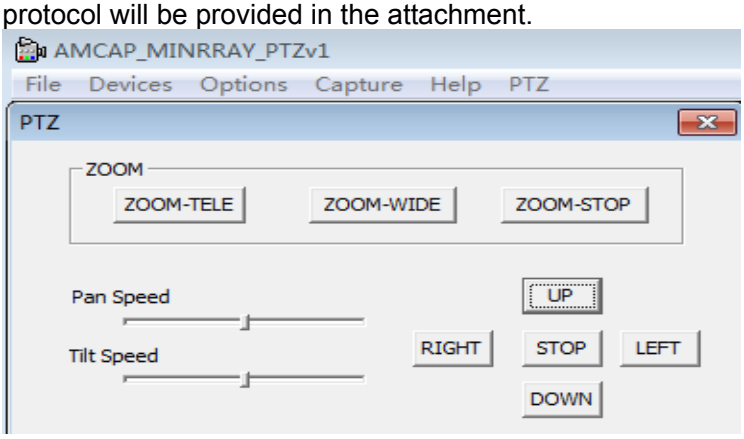

9.When the camera is power-on and begin initialize, horizontally to the left turn to the limit position, vertically turn to the bottom; finally both horizontal and vertical turn to the middle position. The motor stops running, and initialization is completed. (Note: If the power-on mode is opened and saved preset position 0 or 1, then the pan/tilt will be set to 0 or 1 preset position)

10. Factory Default : entry OSD menu by pressing the menu key of remote controller, 【MENU】-> 【RESET】-> 【ALL RESET】, moving the left/right key to select 【Yes】 , then confirm by 【HOME】key as the following form,

```
                RESET
================
    SYS. RESET        NO
    CAM. RESET        NO
    P T. RESET        NO
    ALL. RESET        NO

    BACK / M E N U
```

Camera Highlights

1.Chinese / English menu,convenient to use.
2. Provide high speed transmission USB3.0 interface, DVI-I interface(including the HDMI and YPbPr signal)
3. IR remote controller signal transparent transmission function: camera can receive both its own remote controller signal and the one from terminal equipment, by transmitting the signal through VISCA IN to terminal equipment IR receiver.

Camera Specifications:

1. video format : 1080P60/50/30/25 720P60/50/30/25
2. Video Output Interface : USB3.0, DVI-I(including the HDMI and YPbPr signal)
3. Image Sensor : 1/2.8 inch 2 Megapixels high quality HD CMOS Sensor
4. Lens: f4.7mm-84.6mm, (18×optical zoom), F1.8-2.8, angle of view: 62°- 3.2°.
5. Rotation: ±170°for pan rotation, and -30°~+90°for tilt rotation, support up-side down installation.
6. Speed: 0.1°-180°/sec for pan rotation, 0.1°-80°/sec for tilt rotation.
7. Presets : 10 preset positions (can reach to128 presets by serial command), precision error less than 0.2°.
8. Support auto/ manual white balance/indoors/ out doors/ controller auto/ auto-track white balance , auto/manual exposure (iris , shuttle) , auto/manual/One Push focus
9. support WDR function: with performance ≥100dB,
10. Control Signal interface : 8 pins mini DIN, RS232/RS485，VISCA/Pelco-D/Pelco-P protocol
11. Power interface : HEC3800 power jack , Power supply adapter: 12VDC/2A
12. Max power consumption: 12W
13. working temperature: -5℃ to +45℃
14. Storage temperature:-20℃ to +60℃
15. Weight: 1.3KG

Camera Interface Explanation

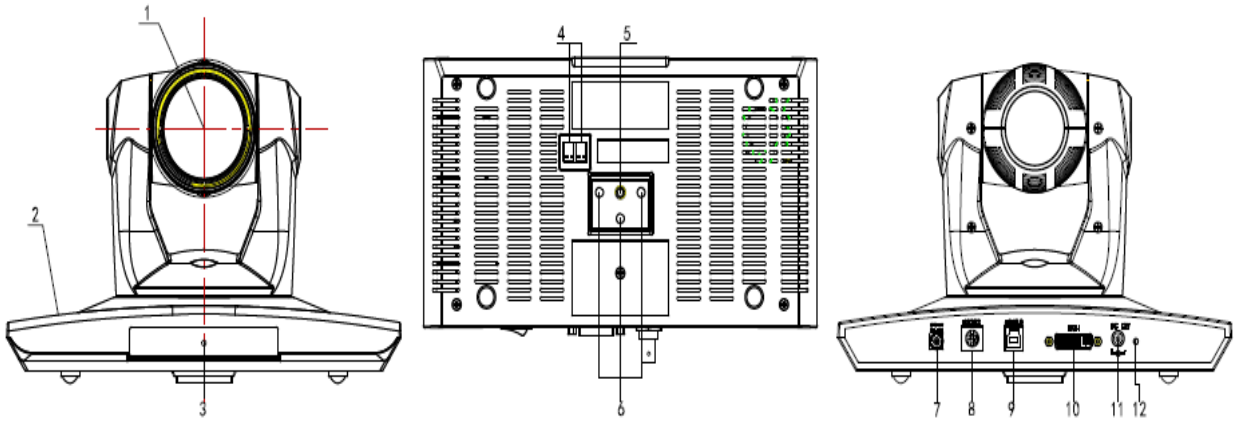

1.Camera lens 2.Camera base 3.Power indicator light
4.Remote Controller Receiver light 5.Tripod screw hole 6.Installation hole
7.RS232 control interface 8. USB3.0 B Male interface . 9.12VDC Input Power Supply Jack

Dimension:

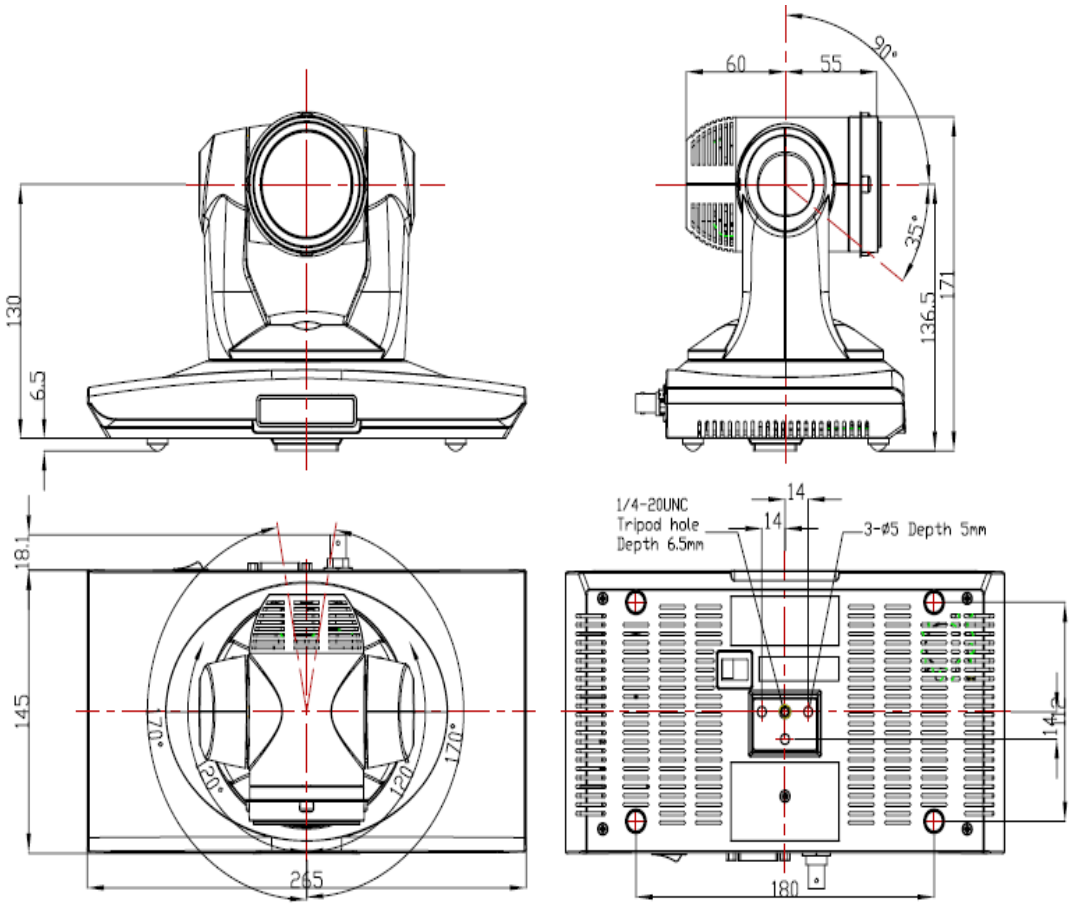

Remote Controller Explanation:

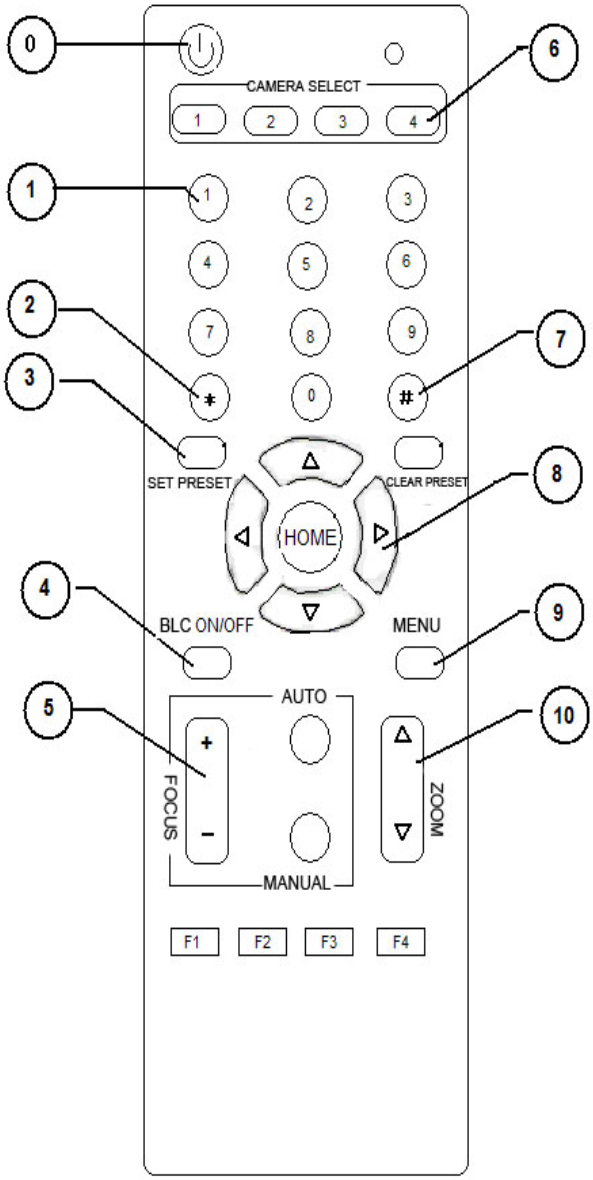

Definition of IR controller

0、Standby key
After pressing the standby key, the camera will step into standby mode.Press again,the camera will open again.(Note: Standby mode power consumption is about half of the normal mode)

1.Number key
Setting or locating presets

2.* key
Key combination use

3.Set preset key:
Set preset：
Set preset key + 0-9 number key：
Clear preset key：
Clear preset key + 0-9 number key
or：＃+＃+＃：clear all the presets

4.BLC control key
BLC ON：open black light compensation（only work when exposure mode setting is Auto）
BLC OFF：close black light compensation（Only available in the exposure mode effective for Auto）

5.Focus control key
Focus＋：focus length far from near
Focus－：focus length near from far
Auto focus：the camera focus mode is auto
Manual focus：the camera focus mode is manual

6.Camera address selection
Select the camera which want to be controlled

7. # key
Key combination use

8.pan/tilt control key
Press ▲key ：up
Press ▼key ：down
Press ◀key ：left
Press ▼key：right
“HOME” key: Return to the middle position

9.Menu setting
Open or close the OSD menu

10.Zoom Control key
zoom▼：lens near
zoom▲：lens far

11.Camera IR remote control address selection
【*】+【＃】+【F1】：Camera Address No.1
【*】+【＃】+【F2】：Camera Address No. 2
【*】+【＃】+【F3】：Camera Address No. 3
【*】+【＃】+【F4】：Camera Address No. 4

Usage of IR Remote Controller

Finishing initialization, it can receive and execute the IR commands. Users can control the pan/tilt/zoom, setting and running preset positions via the IR remote controller.

Key Instruction：

1、In this instruction, “press the key” means a click rather than a long-press, and a special note will be given if a long-press for more than one second is required.

2、When a key-combination is required, do it in sequence. For example, “ 【*】+【#】+【F1】”means press“【*】”first and then press“【#】” and press“【F1】”at last.

1.Pan/Tilt Control

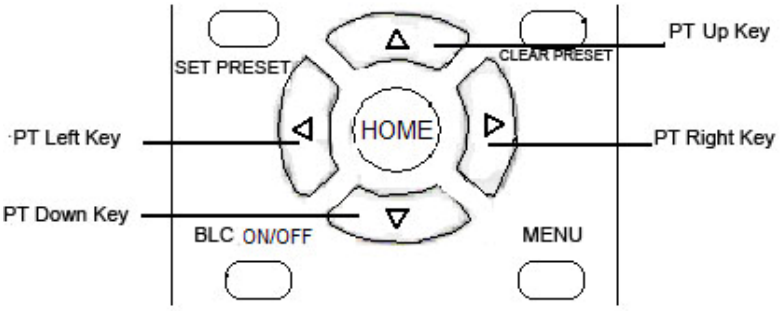

Up: press ◀
Down: press ▲
Left: press ▼
Right: press ◀
Back to middle position：press【HOME】
Press and hold the up/down/left/right key, the pan/tilt will keep running, from slow to fast, until it run to the endpoint; The pan/tilt running stops as soon as the key is released.

2. Zoom Control

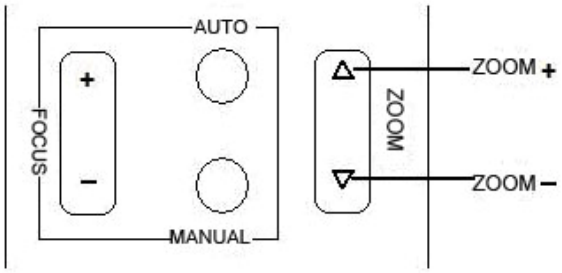

ZOOM OUT: press 【ZOOM ▼】 key
ZOOM IN: press 【ZOOM ◀】 key
Press and hold the key, the camera will keep zooming in or zooming out and stops as soon as the key is released.
Support Auto and Manual focus

3. Focus Control

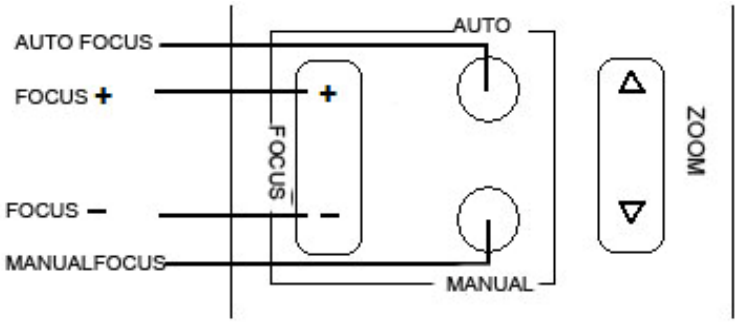

Focus (far)： Press 【focus+】 key
Focus (near)： Press 【focus-】key

Auto Focus: Press 【auto】
Manual Focus: Press 【manual】
Press and hold the key, the action of focus continues and stops as soon as the key is released.

4.BLC Setting

BLC ON / OFF :not support

5. Presets setting

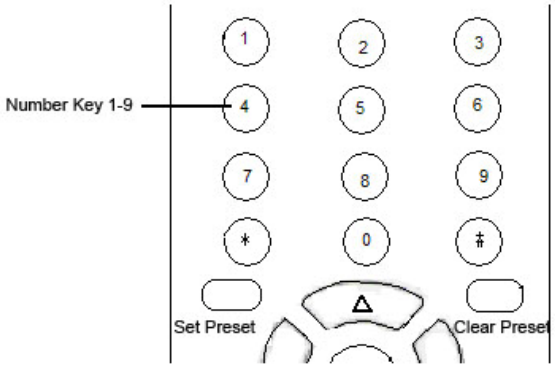

1、Preset setting : to set a preset position, the users should press the 【SET PRESET】key first and then press the number key 0-9 to set a relative position, 10 preset positions in total are available.
2、Preset clearing : to clear a preset position, the user can press the 【CLEAR PRESET】key first and then press the number key 0-9 to clear the relative position;
Note : press the【#】key three times continually to cancel all the presets.

6、Preset Running

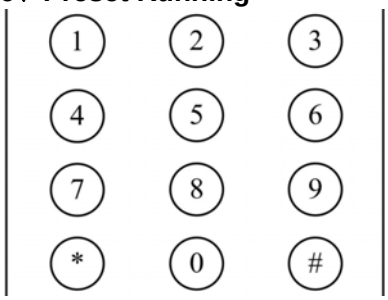

Press a number key 0-9 directly to run a relative preset.
Note: Action in vain if a relative preset position does not exist.

7、Camera Selection

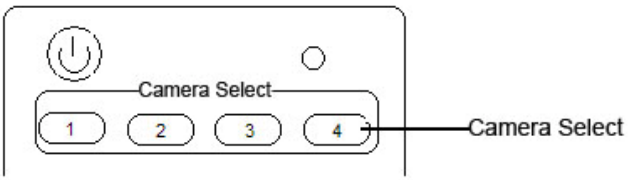

Select the camera number to control.

8、Camera Remote Controller Address Setting

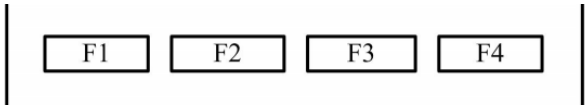

【*】+【＃】+【F1】: Camera Address No.1
【*】+【＃】+【F2】: Camera Address No. 2
【*】+【＃】+【F3】: Camera Address No. 3
【*】+【＃】+【F4】: Camera Address No. 4

RS-232C Interface (Pin Specs)

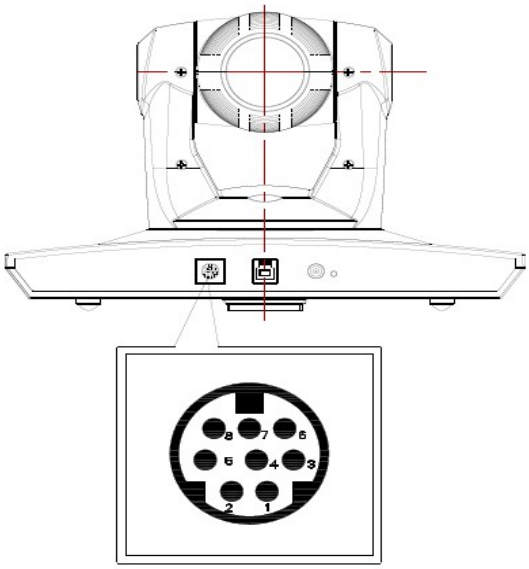

No.	Function
1	DTR
2	DSR
3	TXD 1
4	GND
5	RXD 1
6	RS485-A
7	IR OUT
8	RS485-B

Camera **Windows DB-9**

Camera	Windows DB-9
1.DTR	1.CD
2.DSR	2.RXD
3.TXD1	3.TXD
4.GND	4.DTR
5.RXD1	5.GND
6.RS485-A	6.DSR
7.IR OUT	7.RTS
8.RS485-B	8.CTS
	9.RI

Camera **Mini DIN**

Camera	Mini DIN
1.DTR	1.DTR
2.DSR	2.DSR
3.TXD	3.TXD
4.GND	4.GND
5.RXD	5.RXD
6.RS485-A	6.GND
7.IR OUT	7.NC
8.RS485-B	8.NC

Camera **RS485**

1.DTR
2.DSR
3.TXD1
4.GND
5.RXD1
6.RS485-A → A
7.IR OUT
8.RS485-B → B
9.GND

COM Control

In normal working mode, the camera is able to be controlled via RS-232C/RS485 command (VISCA IN) . The parameter of the RS232C/RS485 COM is as following :
Baud Rate ：2400/4800/9600/115200 bit/s
Start bit：1bit ;
Data bit: 8bit ;
Stop bit : 1bit;
Code: None
Connected to power, the camera runs to the down left, then back to middle, with the farthest zoom rate in the auto focus and auto iris mode. After initialization,the camera runs to the preset No.0 or 1 if it is saved.Then the users can control the camera via serial command.

VISCA Protocol

Part1 . Camera Return Command

Ack/Completion Message		
	Command Packet	**Note**
ACK	z0 41 FF	Returned when the command is accepted.
Completion	z0 51 FF	Returned when the command has been executed.

z = Camera Address + 8

Error Messages		
	Command Packet	**Note**
Syntax Error	z0 60 02 FF	Returned when the command format is different or when a command with illegal command parameters is accepted
Command Not Executable	z0 61 41 FF	Returned when a command cannot be executed due to current conditions. For example, when commands controlling the focus manually are received during auto focus.

Part 2 Camera Control Command

Command	Function	Commad Packet	Note
AddressSet	Broadcast	88 30 01 FF	Address setting
IF_Clear	Broadcast	88 01 00 01 FF	I/F Clear
CommandCancel		8x 21 FF	
CAM_Power	On	8x 01 04 00 02 FF	Power ON/OFF
	Off	8x 01 04 00 03 FF	
CAM_Zoom	Stop	8x 01 04 07 00 FF	
	Tele(Standard)	8x 01 04 07 02 FF	
	Wide(Standard)	8x 01 04 07 03 FF	
	Tele(Variable)	8x 01 04 07 2p FF	p = 0(low) - 7(high)
	Wide(Variable)	8x 01 04 07 3p FF	
	Direct	8x 01 04 47 0p 0q 0r 0s FF	pqrs: Zoom Position
CAM_Focus	Stop	8x 01 04 08 00 FF	
	Far(Standard)	8x 01 04 08 02 FF	
	Near(Standard)	8x 01 04 08 03 FF	
	Direct	8x 01 04 48 0p 0q 0r 0s FF	pqrs: Focus Position
	One Push AF	8x 01 04 18 01 FF	
CAM_ZoomFocus	Direct	8x 01 04 47 0p 0q 0r 0s 0t 0u 0v 0w FF	pqrs: Zoom Position tuvw: Focus Position
CAM_WB	Auto	8x 01 04 35 00 FF	Normal Auto
	Indoor	8x 01 04 35 01 FF	
	Outdoor	8x 01 04 35 02 FF	
	OnePush	8x 01 04 35 03 FF	
	Manual	8x 01 04 35 05 FF	

Command	Function	Commad Packet	Note
CAM_RGain	Reset	8x 01 04 03 00 FF	Manual Control of R Gain
	Up	8x 01 04 03 02 FF	
	Down	8x 01 04 03 03 FF	
	Direct	8x 01 04 43 00 00 0p 0q FF	pq: R Gain
CAM_Bgain	Reset	8x 01 04 04 00 FF	Manual Control of B Gain
	Up	8x 01 04 04 02 FF	
	Down	8x 01 04 04 03 FF	
	Direct	8x 01 04 44 00 00 0p 0q FF	pq: B Gain
CAM_AE	Full Auto	8x 01 04 39 00 FF	Automatic Exposure mode
	Manual	8x 01 04 39 03 FF	Manual Control mode
	Shutter priority	8x 01 04 39 0A FF	Shutter Priority Automatic Exposure mode
	Iris priority	8x 01 04 39 0B FF	Iris Priority Automatic Exposure mode
	Bright	8x 01 04 39 0D FF	Bright mode(Manual control)
CAM_Shutter	Reset	8x 01 04 0A 00 FF	Shutter Setting
	Up	8x 01 04 0A 02 FF	
	Down	8x 01 04 0A 03 FF	
	Direct	8x 01 04 4A 00 00 0p 0q FF	pq: Shutter Position
CAM_Iris	Reset	8x 01 04 0B 00 FF	Iris Setting
	Up	8x 01 04 0B 02 FF	
	Down	8x 01 04 0B 03 FF	
	Direct	8x 01 04 4B 00 00 0p 0q FF	pq: Iris Position
CAM_Gain	Reset	8x 01 04 0C 00 FF	Gain Setting
	Up	8x 01 04 0C 02 FF	
	Down	8x 01 04 0C 03 FF	
	Direct	8x 01 04 0C 00 00 0p 0q FF	pq: Gain Positon
CAM_Bright	Direct	8x 01 04 4D 00 00 0p 0q FF	pq: Bright l Positon
CAM_ExpComp	On	8x 01 04 3E 02 FF	Exposure Compensation ON/OFF
	Off	8x 01 04 3E 03 FF	
	Reset	8x 01 04 0E 00 FF	Exposure Compensation Amount Setting
	Up	8x 01 04 0E 02 FF	
	Down	8x 01 04 0E 03 FF	
	Direct	8x 01 04 4E 00 00 0p 0q FF	pq: ExpComp Position
CAM_Aperture	Reset	8x 01 04 02 00 FF	Aperture Control
	Up	8x 01 04 02 02 FF	
	Down	8x 01 04 02 03 FF	
	Direct	8x 01 04 42 00 00 0p 0q FF	pq: Aperture Gain
CAM_Memory	Reset	8x 01 04 3F 00 0p FF	p: Memory Number(=0 to 127) Corresponds to 0 to 9 on the Remote Commander
	Set	8x 01 04 3F 01 0p FF	
	Recall	8x 01 04 3F 02 0p FF	
CAM_LR_Reverse	On	8x 01 04 61 02 FF	Image Flip Horizontal ON/OFF
	Off	8x 01 04 61 03 FF	
CAM_PictureFlip	On	8x 01 04 66 02 FF	Image Flip Vertical ON/OFF
	Off	8x 01 04 66 03 FF	
VideoSystem Set		8x 01 06 35 00 0p FF	P: Video format 1:1080P60 2:1080P50 4:720P60 5:720P50 6:1080P30 7:1080P25 8:720P30 9:720P25
CAM_IDWrite		8x 01 04 22 0p 0q 0r 0s FF	pqrs: Camera ID (=0000 to FFFF)
SYS_Menu	OFF	8x 01 06 06 03 FF	Turn off the menu

Command	Function	Commad Packet	Note
IR_Receive	On	8x 01 06 08 02 FF	IR(remote commander)receive ON/OFF
	Off	8x 01 06 08 03 FF	
	On/Off	8x 01 06 08 10 FF	
IR_ReceiveReturn	On	8x 01 7D 01 03 00 00 FF	IR(remote commander)receive message via the VISCA communication ON/OFF
	Off	8x 01 7D 01 13 00 00 FF	
Pan_tiltDrive	Up	8x 01 06 01 VV WW 03 01 FF	VV: Pan speed 0x01 (low speed) to 0x18 (high speed) WW: Tilt speed 0x01 (low speed) to 0x14 (high speed) YYYY: Pan Position(TBD) ZZZZ: Tilt Position(TBD)
	Down	8x 01 06 01 VV WW 03 02 FF	
	Left	8x 01 06 01 VV WW 01 03 FF	
	Right	8x 01 06 01 VV WW 02 03 FF	
	Upleft	8x 01 06 01 VV WW 01 01 FF	
	Upright	8x 01 06 01 VV WW 02 01 FF	
	DownLeft	8x 01 06 01 VV WW 01 02 FF	
	DownRight	8x 01 06 01 VV WW 02 02 FF	
	Stop	8x 01 06 01 VV WW 03 03 FF	
	AbsolutePosition	8x 01 06 02 VV WW 0Y 0Y 0Y 0Y 0Z 0Z 0Z 0Z FF	
	RelativePosition	8x 01 06 03 VV WW 0Y 0Y 0Y 0Y 0Z 0Z 0Z 0Z FF	
	Home	8x 01 06 04 FF	
	Reset	8x 01 06 05 FF	
Pan-tiltLimitSet	Set	8x 01 06 07 00 0W 0Y 0Y 0Y 0Y 0Z 0Z 0Z 0Z FF	W:1 UpRight 0:DownLeft YYYY: Pan Limit Position(TBD) ZZZZ: Tilt Limit Position(TBD)
	Clear	8x 01 06 07 01 0W 07 0F 0F 0F 07 0F 0F 0F FF	

Part3 Inquiry Command

Command	Command Packet	Return Packet	Note
CAM_PowerInq	8x 09 04 00 FF	y0 50 02 FF	On
		y0 50 03 FF	Off(Standby)
CAM_ZoomPosInq	8x 09 04 47 FF	y0 50 0p 0q 0r 0s FF	pqrs: Zoom Position
CAM_FocusModeInq	8x 09 04 38 FF	y0 50 02 FF	Auto Focus
		y0 50 03 FF	Manual Focus
CAM_FocusPosInq	8x 09 04 48 FF	y0 50 0p 0q 0r 0s FF	pqrs: Focus Position
CAM_WBModeInq	8x 09 04 35 FF	y0 50 00 FF	Auto
		y0 50 01 FF	Indoor mode
		y0 50 02 FF	Outdoor mode
		y0 50 03 FF	OnePush mode
		y0 50 04 FF	ATW
		y0 50 05 FF	Manual
CAM_RGainInq	8x 09 04 43 FF	y0 50 00 00 0p 0q FF	pq: R Gain
CAM_BGainInq	8x 09 04 44 FF	y0 50 00 00 0p 0q FF	pq: B Gain
CAM_AEModeInq	8x 09 04 39 FF	y0 50 00 FF	Full Auto
		y0 50 03 FF	Manual
		y0 50 0A FF	Shutter priority
		y0 50 0B FF	Iris priority
		y0 50 0D FF	Bright
CAM_ShutterPosInq	8x 09 04 4A FF	y0 50 00 00 0p 0q FF	pq: Shutter Position
CAM_IrisPosInq	8x 09 04 4B FF	y0 50 00 00 0p 0q FF	pq: Iris Position
CAM_GainPosiInq	8x 09 04 4C FF	y0 50 00 00 0p 0q FF	pq: Gain Position
CAM_ BrightPosiInq	8x 09 04 4D FF	y0 50 00 00 0p 0q FF	pq: Bright Position
CAM_ExpCompModeInq	8x 09 04 3E FF	y0 50 02 FF	On
		y0 50 03 FF	Off
CAM_ExpCompPosInq	8x 09 04 4E FF	y0 50 00 00 0p 0q FF	pq: ExpComp Position
CAM_ApertureInq	8x 09 04 42 FF	y0 50 00 00 0p 0q FF	pq: Aperture Gain
CAM_MemoryInq	8x 09 04 3F FF	y0 50pp FF	pp: Memory number last operated.
SYS_MenuModeInq	8x 09 06 06 FF	y0 50 02 FF	On
		y0 50 03 FF	Off
CAM_LR_ReverseInq	8x 09 04 61 FF	y0 50 02 FF	On
		y0 50 03 FF	Off
CAM_PictureFlipInq	8x 09 04 66 FF	y0 50 02 FF	On
		y0 50 03 FF	Off
CAM_IDInq	8x 09 04 22 FF	y0 50 0p 0q 0r 0s FF	pqrs: Camera ID
CAM_VersionInq	8x 09 00 02 FF	y0 50 ab cd	

Command	Command Packet	Return Packet	Note
		mn pq rs tu vw FF	
VideoSystemInq	8x 09 06 23 FF	y0 50 0p FF	P: 4~9 Video format 4:720P60 5:720P50 6:1080P30 7:1080P25 8:720P30 9:720P25
IR_Receive	8x 09 06 08 FF	y0 50 02 FF	On
		y0 50 03 FF	Off
IR_ReceiveReturn		y0 07 7D 01 04 00 FF	Power ON/OFF
		y0 07 7D 01 04 07 FF	Zoom tele/wide
		y0 07 7D 01 04 38 FF	AF On/Off
		y0 07 7D 01 04 33 FF	CAM_Backlight
		y0 07 7D 01 04 3F FF	CAM_Memory
		y0 07 7D 01 06 01 FF	Pan_tiltDrive
Pan-tiltMaxSpeedInq	8x 09 06 11 FF	y0 50 ww zz FF	ww: Pan Max Speed zz: Tilt Max Speed
Pan-tiltPosInq	8x 09 06 12 FF	y0 50 0w 0w 0w 0w 0z 0z 0z 0z FF	wwww: Pan Position zzzz: Tilt Position

Note : 【x】 means the camera address you want to control , 【y】=【x + 8】。

Pelco-D Protocol Command List

Function	Byte1	Byte2	Byte3	Byte4	Byte5	Byte6	Byte7
Up	0xFF	Address	0x00	0x08	Pan Speed	Tilt Speed	SUM
Down	0xFF	Address	0x00	0x10	Pan Speed	Tilt Speed	SUM
Left	0xFF	Address	0x00	0x04	Pan Speed	Tilt Speed	SUM
Right	0xFF	Address	0x00	0x02	Pan Speed	Tilt Speed	SUM
Upleft	0xFF	Address	0x00	0x0C	Pan Speed	Tilt Speed	SUM
Upright	0xFF	Address	0x00	0x0A	Pan Speed	Tilt Speed	SUM
DownLeft	0xFF	Address	0x00	0x14	Pan Speed	Tilt Speed	SUM
Upleft	0xFF	Address	0x00	0x0C	Pan Speed	Tilt Speed	SUM
Zoom In	0xFF	Address	0x00	0x20	0x00	0x00	SUM
Zoom Out	0xFF	Address	0x00	0x40	0x00	0x00	SUM
Focus Far	0xFF	Address	0x00	0x80	0x00	0x00	SUM
Focus Near	0xFF	Address	0x01	0x00	0x00	0x00	SUM
Set Preset	0xFF	Address	0x00	0x03	0x00	Preset ID	SUM
Clear Preset	0xFF	Address	0x00	0x05	0x00	Preset ID	SUM
Call Preset	0xFF	Address	0x00	0x07	0x00	Preset ID	SUM
Query Pan Position	0xFF	Address	0x00	0x51	0x00	0x00	SUM
Query Pan Position Response	0xFF	Address	0x00	0x59	Value High Byte	Value Low Byte	SUM
Query Tilt Position	0xFF	Address	0x00	0x53	0x00	0x00	SUM
Query Tilt Position Response	0xFF	Address	0x00	0x5B	Value High Byte	Value Low Byte	SUM
Query Zoom Position	0xFF	Address	0x00	0x55	0x00	0x00	SUM
Query Zoom Position Response	0xFF	Address	0x00	0x5D	Value High Byte	Value Low Byte	SUM

Pelco-P Protocol Command List

Function	Byte1	Byte2	Byte3	Byte4	Byte5	Byte6	Byte7	Byte8
Up	0xA0	Address	0x00	0x08	Pan Speed	Tilt Speed	0xAF	XOR
Down	0xA0	Address	0x00	0x10	Pan Speed	Tilt Speed	0xAF	XOR
Left	0xA0	Address	0x00	0x04	Pan Speed	Tilt Speed	0xAF	XOR
Right	0xA0	Address	0x00	0x02	Pan Speed	Tilt Speed	0xAF	XOR
Upleft	0xA0	Address	0x00	0x0C	Pan Speed	Tilt Speed	0xAF	XOR
Upright	0xA0	Address	0x00	0x0A	Pan Speed	Tilt Speed	0xAF	XOR

Function	Byte1	Byte2	Byte3	Byte4	Byte5	Byte6	Byte7	Byte8
DownLeft	0xA0	Address	0x00	0x14	Pan Speed	Tilt Speed	0xAF	XOR
DownRight	0xA0	Address	0x00	0x12	Pan Speed	Tilt Speed	0xAF	XOR
Zoom In	0xA0	Address	0x00	0x20	0x00	0x00	0xAF	XOR
Zoom Out	0xA0	Address	0x00	0x40	0x00	0x00	0xAF	XOR
Focus Far	0xA0	Address	0x00	0x80	0x00	0x00	0xAF	XOR
Focus Near	0xA0	Address	0x01	0x00	0x00	0x00	0xAF	XOR
Set Preset	0xA0	Address	0x00	0x03	0x00	Preset ID	0xAF	XOR
Clear Preset	0xA0	Address	0x00	0x05	0x00	Preset ID	0xAF	XOR
Call Preset	0xA0	Address	0x00	0x07	0x00	Preset ID	0xAF	XOR
Query Pan Position	0xA0	Address	0x00	0x51	0x00	0x00	0xAF	XOR
Query Pan Position Response	0xA0	Address	0x00	0x59	Value High Byte	Value Low Byte	0xAF	XOR
Query Tilt Position	0xA0	Address	0x00	0x53	0x00	0x00	0xAF	XOR
Query Tilt Position Response	0xA0	Address	0x00	0x5B	Value High Byte	Value Low Byte	0xAF	XOR
Query Zoom Position	0xA0	Address	0x00	0x55	0x00	0x00	0xAF	XOR
Query Zoom Position Response	0xA0	Address	0x00	0x5D	Value High Byte	Value Low Byte	0xAF	XOR

Menu Setting

1. Main Menu

In normal working mode, press【MENU】key to display the menu, using scroll arrow to point at or highlight the selected items.

```
                MAIN
==================
   LANGUAGE / 语言设置
   （SYSTEM OPTION）
   （CAMERA OPTION）
   （PT OPTION）
   （V. FORMAT）
   （RESET）
   （HELP）

   EXIT / M E N U
```

LANGUAGE: Language setting, Chinese / English
SYSTEM OPTION：system setting
CAMERA OPTION：camera setting
PT OPTION：pan tilt setting
V. FORMAT: video format setting
RESET：reset setting
HELP：for help

2. SYSTEM OPTION

Move the pointer to the (SYSTEM SET) in the Main Menu, click the【HOME】and enter the (SYSTEM SET) as follow,

```
              SYSTEM SET
==============
PROTOCOL          VISCA
ADDR               01
B. RATE            9600
RS485              OFF
ARM. VER           1.0A
F P G A. VER       1.0
CAM. VER           010404
MODEL              UH-S

BACK / M E N U
```

PROTOCOL: Reset Condition VISCA
Protocol type:VISCA/Pelco-P/Pelco-D
ADDR：Reset Condition: 01
VISCA=1~7 Pelco-P/Pelco-D = 1~63
B. RATE：Reset Condition:9600
2400/4800/9600/115200
RS485：Reset Condition:off
It is ON when using RS485 communication
A R M **VER./** F P G A **VER/CAM VER:** version information,it will upgrate synchronously with the software
Machine Model: Machine internal identified code **UH-S**

3. CAMERA OPTION

Move the pointer to the (CAMERA SET) in the Main Menu, click the【HOME】and enter the (CAMERA SET) as follow,

```
CAMERA SET
================
  （EXPOSURE）
  （COLOR）
  （LEN）

 BACK / M E N U
```

EXPOSURE：exposure setting
COLOR: color setting
LEN: lens setting

3.1 EXPOSURE SETTING

Move the pointer to the (EXPOSURE) in the Main Menu, click the【HOME】and enter the (EXPOSURE SET) as follow,

```
EXPOSURE SET
=================
EXP.  MODE          Auto
SHUTTER            --
IRIS               --
GAIN               --
BRIGHT              5
EV. MODE            off
LEVEL              --
WDR                 off
LEVEL               --

BACK / M E N U
```

EXP. MODE：Reset Condition: Auto
Available mode: Auto，Manual，Shutter，Iris
SHUTTER：Reset Condition: Default
Available selections: 1/60、1/90、1/100、1/125、1/180、1/250、1/350、1/500、1/725、1/1000、1/1500、1/2000、1/3000、1/4000、1/6000、1/10000（only available in Manual Shutter mode）
IRIS：Reset Condition: Default
Available:0~13（only available in Manual Iris mode）
BRIGHT：Reset Condition: 5
Available: 0~9
GAIN: Reset Condition: Default
Available: 0~15（only available in Manual mode）
EV MODE： Reset Condition: off
Available: On/Off (only available in non manual model)
LEVEL: Reset Condition: Default
Available Setting: -3~3
WDR : Reset Condition: off
Available: On/Off
LEVEL：Reset Condition: Default
Available Setting: 0~5

3.2 COLOR SETTING

Move the pointer to the (COLOR SET) in the Main Menu, click the【HOME】and enter the (COLOR SET) as follow,

```
              COLOR
==================
  WB.MODE          ATW
  R.GAIN          --
  B.GAIN          --
  GAMMA            0
  SATURATION       3
  APERTURE         5
  FLICK            Off
  NR   LEVEL       2
  CONTRAST         3
  BACK / M E N U
```

WB MODE：Reset Condition: ATW
White balance mode setting: Auto、Indoor、Outdoor、OnePush、ATW、Manual
R.GAIN：Reset Condition:Default
Red gain setting：0~50（only available in Manual mode）
B.GAIN：Reset Condition:Default
Blue gain setting：0~50（only available in Manual mode）
GAMMA: Reset Condition:0
GAMMA setting: 0~3
SATURATION: Reset Condition:3
SATURATION setting: 0~9
APERTURE：Reset Condition:5
APERTURE setting: 0~9
FLICK：Reset Condition:off
FLICK setteing50HZ/60HZ/OFF
NR LEVEL: Reset Condition:2
NR LEVEL setting: 0~9
CONTRAST: Reset Condition:3
CONTRAST setting:0~9

3.3 LENS SETTING

Move the pointer to the (LEN SET) in the Main Menu, click the【HOME】and enter the (LEN SET) as follow,

```
              LEN
==================
  FOCUS        AUTO

  BACK / M E N U
```

FOCUS：Auto，Manual，OnePush

4. PAN TILT SETTING

Move the pointer to the (PT SET) in the Main Menu, click the【HOME】and enter the (PT SET) as follow,

```
              PT SET
=====================
  POWER. ACT       Off
  SPEEDBYZ         On
  MOUNT. MODE      Up
  IR M.SPEED       16
  IR Z.SPEED       07
  MIN.SPEED        0
  SCAN. SPEED      10

     BACK / M E N U
```

POWER ACT：Reset Condition: OFF
0/1(the camera will move to no.0/1 preset position after 12 seconds without control since power on), Off
SPEEDBYZ：Reset Condition: On
only work for IR remote control:
On（when the camera zoom becomes larger, rotation speed comes down）, Off

MOUNT.MODE：Reset Condition: Up
UP, DOWN
IR M.SPEED： Reset Condition: 16
IR remote control move speed: 5~24
IR Z.SPEED： Reset Condition: 07
IR remote control zoom speed: 1~7
MIN.SPEED: Reset Condition: 0
Minimum start speed for serial command: 0~9
SCAN. SPEED: Reset Condition: 10
move speed: 4~15

5. RESET

Move the pointer to the (SET) in the Main Menu, click the【HOME】and enter the (SET) as follow,

```
                RESET
================
SYSTEM. RESET        NO
CAM.RESET            NO
PT. RESET            NO
ALL. RESET           NO

BACK / M E N U
```

SYS. RESET：system reset:Protocol: VISCA; Address: 1; baud rate:9600; RS485:Off
CAM. RESET：camera parameter reset
PT. RESET：power action: Off; speed by zone: On; mount mode:Up;
IR move speed:16; IR zoom speed: 7;MIN.SPEED 0;SCAN. SPEED 10
ALL RESET： reset above 3 items

6. HELP

Show instruction of the OSD menu operation

```
                HELP
================
∧  ∨     SELET   MENU
<  >     CHANGESETTING
H O M E  ENTER
M E N U  RETURN

BACK / M E N U
```

7. EXIT

In main menu, press the key【MENU】again will show the exit window as follows:

```
                EXIT
================
SAVE?                Yes/No


OK / H O M E   BACK / M E N U
```

SAVE?：to save settings：Yes、No.
Notice：press【HOME】key to confirm;
press【MENU】key to return to the main menu

Troubleshooting

Camera Maintains

If camera is not used for long time, please turn off power adapter switch and AC plug.
Use soft cloth or tissue to clean the camera cover.
Use soft cloth to clean the lens; Use neuter cleanser if bad smeared. No use strong or corrosive cleanser or corrosive cleanser avoiding scuffing.

Unqualified Application

No shooting extreme light object, such as sunlight, lamplight etc.
No operating in unstable light environment, otherwise image will twinkle
No operating in radio wave with great power environment, such as TV station or Wireless Launcher etc.
Image effective will not be good when the light is not accordant with camera's lux.

Troubleshooting

Image

No image
1, Check whether the power cord, voltage is OK, power indicator light is ON.
2, Turn off the power supply to check whether the camera can auto configure.
3, Check the dial switch in bottom and make sure the two dial position are all on OFF.
4, Check video and TV wire is connected correctly.

Abnormal display of image
Check whether the video connecting wires is well and other connecting sockets and camera flat wires are well.

The camera can only works at one focus, other position can not be focused.
Change the position to see if this phenomenon still exists. If yes, it may be caused by Camera control drive focus control system trouble.

Image dithering when at Maximum Zoom
1, Check whether camera is fixed correctly.
2, If there is vibrative mechanical object.

Remote Controller

1, Change the battery
2, Check the camera operation mode is right.

Terminal

1, Check the camera operation mode is right.
2, Check control wire is connected correctly.